Instruction Manual

(original)

Installation and Operating Instructions

X-Flow90 Motor Driven Unit



flowsort

Manufacturer's address:

Flowsort Kft.
Gyár u. 2
2040 Budaörs
Hungary
T: +36 23 880-977
W: www.flowsort.com
E: info.hu@flowsort.com

Document Version: 1.0 – Hardware Version: 1.0
14-October-2026
author: Csernai Csongor

The copyright of these installation and operating instructions remains with Flowsort BV. The installation and operating instructions contain technical regulations and drawings which may not be reproduced partially or in full, transmitted by any means, utilized without permission for competitive purposes or disclosed to third parties.

TABLE OF CONTENTS

TABLE OF CONTENTS ..... **- 3 -**

SAFETY PRECAUTIONS ..... **- 4 -**

1.1 General warning ..... - 4 -
1.1.1 Installation ..... - 4 -
1.1.2 Operations ..... - 4 -
1.2 General caution ..... - 5 -
1.2.1 Installation ..... - 5 -
1.2.2 Maintenance ..... - 6 -
1.3 Symbols ..... - 6 -
1.4 Risk Analysis ..... - 7 -

PRODUCT INFORMATION ..... **- 8 -**

2.1 Technical Data Sheet ..... - 8 -
2.2 Product description ..... - 8 -
2.3 Options ..... - 8 -

PRECAUTIONS BEFORE USE ..... **- 9 -**

3.1 Explanation part names ..... - 9 -
3.2 Additional documentation for application ..... - 10 -
3.3 Staff training ..... - 10 -
3.4 Safe operation ..... - 10 -

INSTALLATION ..... **- 11 -**

4.1 General rules ..... - 11 -
4.2 Installation ..... - 11 -
4.3 Assembly/disassembly device vs framework ..... - 12 -
4.4 Wiring and grounding of the device ..... - 13 -

OPERATION ..... **- 14 -**

5.1 First checks before operating ..... - 14 -
5.2 During operation ..... - 14 -
5.3 In case of an accident ..... - 14 -
5.4 Set-up movement ..... - 14 -

MAINTENANCE ..... **- 15 -**

6.1 Maintenance intervals ..... - 15 -
6.2 General maintenance information ..... - 15 -
6.3 Cleaning the belts and rollers ..... - 15 -
6.4 Spare parts ..... - 16 -
6.5 Device inspection ..... - 17 -
6.6 Removal and replacement of parts ..... - 17 -
6.6.1 Driven Roller removal/replacement ..... - 17 -
6.6.2 Poly-V belt removal/replacement ..... - 18 -
6.6.3 Motor driven roller removal/replacement ..... - 18 -
6.6.4 Control card removal/replacement ..... - 19 -

TROUBLESHOOTING ..... **- 20 -**

7.1 Troubleshooting ..... - 20 -

DECLARATION OF CONFORMITY ..... **- 21 -**

7.2 CE & UKCA Certification ..... - 21 -

SAFETY PRECAUTIONS

1.1 GENERAL WARNING



Warning: Indicates an imminently hazardous situation which, if not avoided, will result in death or serious injury.

Do not use the product in an explosive atmosphere, flammable gas atmosphere, corrosive atmosphere, a place exposed to water splashes, or a place close to combustibles. It may cause an electric shock, injury and/or fire.

All work (e.g., installation, connection, operation, maintenance and failure diagnostics) must be done by a qualified and well-trained person. Failure to do so may cause a fire, electric shock and/or injury.

Machine movements are very dangerous. Do not conduct operations as moving, installation, connection and maintenance while the power is on. Be sure to conduct such operations after turning off the power to prevent injury and/or accidents.

1.1.1 INSTALLATION

Never touch the power supply when installing MDR/control card of the motor driven unit. It may cause an electric shock and/or injury.

Please check the specifications of the power supply, the voltage before wiring. Failure to do so may cause a fire, electric shock, injury and/or breakage.

The transfer shall be incorporated into an emergency stop circuit arranged by the system integrator.

Please make sure that the control circuit meets standard EN-IEC 60204-1 and that the emergency stop system must be provided according EN-ISO13850.

1.1.2 OPERATIONS

Do not touch moving structure during operation in order to prevent entanglement and/or clamping accidents. Be sure to add instructions such as start/stop, after switching on the power. It may cause an injury and/or accident due to unexpected start-up.

If control card protection function worked, remove the cause prior to release the function. Otherwise, malfunction may occur again, and it could result in an accident, injury and/or breakage.

If abnormal noises are being given out from the device, turn off the power switch and cut the power supply immediately to avoid unpredictable accidents. Immediately rectify any defects or damage which occurs.

Do not use the unit in any way beyond its specifications. It may cause an injury and/or breakage.

Safety and danger notices must be fully legible.

1.2 GENERAL CAUTION



Caution: Indicates a potentially hazardous situation which, if not avoided, may result in minor or moderate injury and could cause property damage.

Never store or leave the device outdoors.

Do not climb and/or overload on the product. It may cause an accident and/or breakage.

Do not exceed the maximum load capacity or insert objects into gaps. It may cause an accident and/or breakage. The device must be in a good/safe condition.

Never modify the device and control card. It may cause an accident, injury and/or breakage.

Make sure that no liquids can get onto the device. It may cause an electric shock, injury and/or breakage. The device is not provided with dust- and/or waterproof function.

Prevent high impact, such as dropping or striking the device. It may cause an accident and/ or breakage.

Do not to touch the product immediately after operation. It can get very hot and there is a danger that you may get burned and/or injured.

Wear gloves as many metallic parts are used for the device. Failure to do so may cause an injury.

No loose clothes, jewellery or loose hair allowed when working with this machinery.

Do not install the device in a place with high vibration.

Take measures against gravity fall of the unit loads when the unit is installed at elevated position, i.e. side rails/ guards.

1.2.1 INSTALLATION

Always install the product horizontally and make sure it is well mounted in the framework.

Do not pull, bend, push back into the device or twist the electric cable with unnecessary force. There is a danger of fire or electric shock due to breakage.

The DC power supply must be earthed. It may cause an electric shock in case of a breakdown or electrical leakage.

Keep sufficient working space around the device for maintenance.

Wear protective shoes during installation (gravity fall causing foot injury).

1.2.2 MAINTENANCE

Any damage to the device should be repaired immediately.

Turn off the power and wait a couple of minutes before starting maintenance/inspection/repairs. Make sure you secure the power supply against being switched on again.

Only access the plant where access is allowed and follow safety notices. Always were protective clothes and/or use safety equipment.
When replacing parts to the device disassemble only the parts as specified in the manual.

Be careful of not getting your fingers caught in the device.
Make sure you will mount covers and tighten screws properly after maintenance/inspection/repair.

1.3 SYMBOLS



Warning: Indicates an imminently hazardous situation which, if not avoided, will result in death or serious injury.



Caution: Indicates a potentially hazardous situation which, if not avoided, may result in minor or moderate injury and could cause property damage.



Note: To keep the machine in full performance, comply with all technical requirements for the correct use of the machine.



Info: additional information for optimizing and taking the full advantage of your machine.

1.4 RISK ANALYSIS

Hazard	Cause	Avoidance
Serious injury to the area of the spine/wrist	Excessive physical stress during manual lifting of the products	Use appropriate lifting equipment instead of manually lifting.
Serious injury to hands	Clamping of hands between moving objects	Do not touch the product when it is connected to a power source or when it is operating.
	Catching of clothing/jewellery in moving machine parts during maintenance or operation	Use approved working clothes and remove all jewellery.
	Cut injury due to sheet metal plates	Use approved safety gloves.
Serious injury to head	Catching of hair in moving machine parts during maintenance or operation	Bind long hair together and always use a hairnet.
Serious injury to body	Falling of unit loads while removing from the device after breakdown/emergency stop.	Use of safety shoes (minimum Class SB) Use of safety gloves with grip coating Use of safety straps when lifting unit loads above 25kg.

PRODUCT INFORMATION

2.1 TECHNICAL DATA SHEET

General Data	
Voltage Rated Motor Output Current Available Starting Current	DC24V 2.5A x 2 (ECO), 3.5A x 2 (Boost and Boost-8) 3.0A x 2 (ECO), 5A x 2 (Boost), 8A x 2 (Boost-8)
Voltage Rated Motor Output Current	DC48V Current limits: 1.7A, 2A, 2.5A, 3.5A, 4A
Max. load capacity	50 kg
Operating ambient temperature	0°C to 40°C
Operating ambient humidity	≤ to 90% (no condensation)
Noise level	< 79dB – Noise level can vary due to surrounding conditions
Installation site	Indoors
Dimensions	
Unit width	398mm, 498mm, 598mm, 698mm or 798mm
Unit length	541mm or 701mm
Weight	
Unit Weight	~12 kg – ~15 kg
Drive	
Motor Driven Roller	Senergy-Ai MDR
Roller Speed	~530 RPM
Roller Diameter	50mm
Roller material	Steel (other on request)
Roller pitch	80mm

2.2 PRODUCT DESCRIPTION

The attachable, plug-and-play Motor driven unit for the Flowsort X-Flow90 serves as a matching transfer interface, designed to seamlessly integrate with the belt-driven diverter modules to ensure smooth parcel transition, consistent friction, and precise item orientation during 90-degree right-angle sorting.

2.3 OPTIONS

The device has a variety of options which depends on the X-Flow90 unit, to which the Motor driven unit will be placed. The options are regarding width: 398mm to 798mm in 100mm steps. Length can be 541mm or 701mm.

Optional protective covers for installation between the rollers can be requested for the Motor driven unit in any desired quantity.

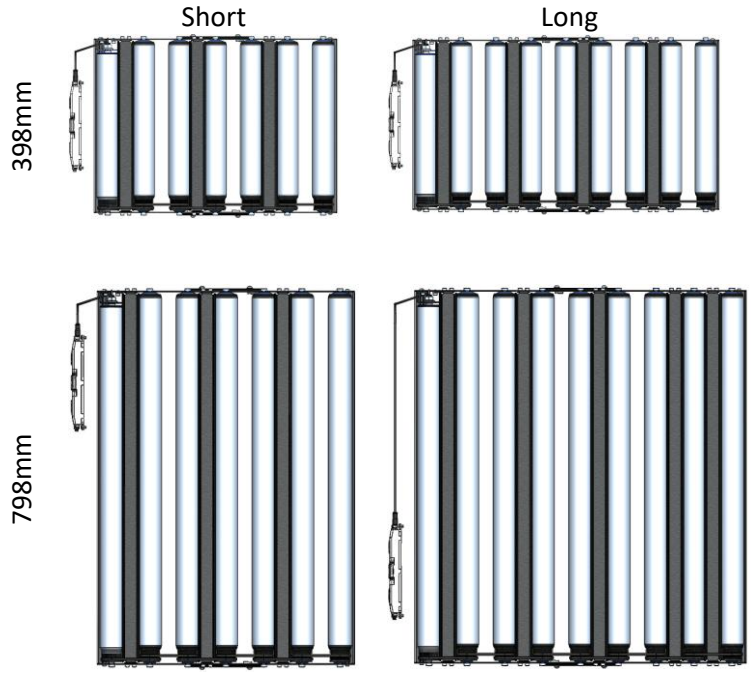

PRECAUTIONS BEFORE USE

3.1 EXPLANATION PART NAMES

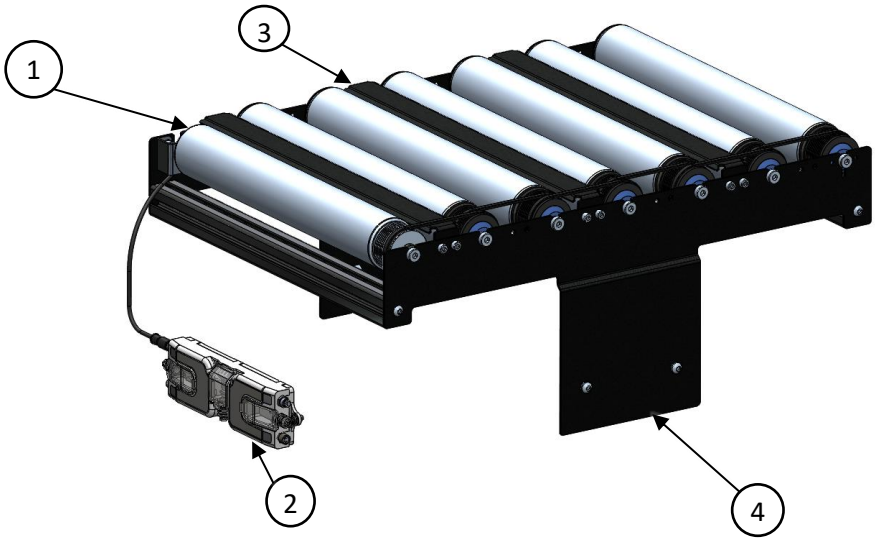

1 Motor driven roller
2 Control card
3 Covers
4 T-Frame

3.2 ADDITIONAL DOCUMENTATION FOR APPLICATION



- General and local rules for accident prevention.
- Law on the Protection of staff.
- Requirements for environmental protection.
- Compliance with established house rules.

3.3 STAFF TRAINING



- You have completed the required training, and you are fully aware of the possible risks.
- You are aware of the predefined house rules and have been instructed by the responsible operator.
- You understand the contents of this documentation.

3.4 SAFE OPERATION



- Please ensure that there are no persons or obstacles in the danger areas.
- When there is a threat of danger make sure you shut down operation at once.
- Regular monitoring and maintenance keep your factory ready for use and safe.
- Safety and hazard statements must be fully legible.
- Immediately correct any defects or damages.
- Wearing and using protective equipment.

INSTALLATION

4.1 GENERAL RULES

Before starting assembly take the following into account:

- Make sure you install the device as designed in the overall layout.
- Check packaging for damages before unpacking the device.
- During unpacking make sure you do not damage the device, and you are using proper tooling. See crate for first instructions.
- Make sure you will align the system together with the rest of the system standing around it.
- Please make sure you clean the worksite after assembly and before testing. Do not leave any spare parts or tools in the work site and surrounding area, it can cause damages.
- Perform a full risk analysis of the entire installation as the motor driven Motor Driven Unit is not a complete system by itself.

Assembly and installation can only be done by properly instructed personnel. These personnel must be under the supervision of a manager who is technically competent concerning the following:

- Knowhow concerning the device and its use.
- The dangers in relation to the assembly of heavy machinery.
- The risks related to incorrect installation.
- The adjustments required for correct installation.

4.2 INSTALLATION

The installation manual provided by Flowsort B.V. is an overall guideline in how to install the modules. Always adapt the installation manual to the national and local safety rules and restrictions.
Flowsort B.V. will always deliver the device pre-assembled. Installation on site only consist out of the following:

- Mounting into framework
- Cable/wiring (power and data)

If any adjustments are made, both to the device itself as to the position within the framework, then Flowsort B.V. will not take responsibility for the machinery because it represents unintended use of the device.
For wiring instructions please check https://www.pulseroller.com/downloads

Make sure that each module section is well supported before you mount the device into the framework. After assembly do not move this framework as it could cause damages to the framework. After installation always mount the leg set to the floor or to a solid construction. It reduces movement/vibration during operation.

4.3 ASSEMBLY/DISASSEMBLY DEVICE VS FRAMEWORK

The device can be mounted onto the X-Flow90 by hand. Mounting hardware is not included in the package. Default bolt size: M6x12 (different size on request).

Lifting and transporting the products is at own risk and own responsibility.
Be careful while moving the devices over the ground and through the air!
Do not lift the device by its belts or rollers!

Lift the device onto the X-Flow90 and make sure, that it is aligned properly! Use 2x M6 fasteners and screw the Motor driven unit to the lower aluminium profile of the X-Flow90 on each side! Fasten the screws of the ConveyLinx controller to the chassis of the X-Flow90!

To disassemble, do these steps in reverse.

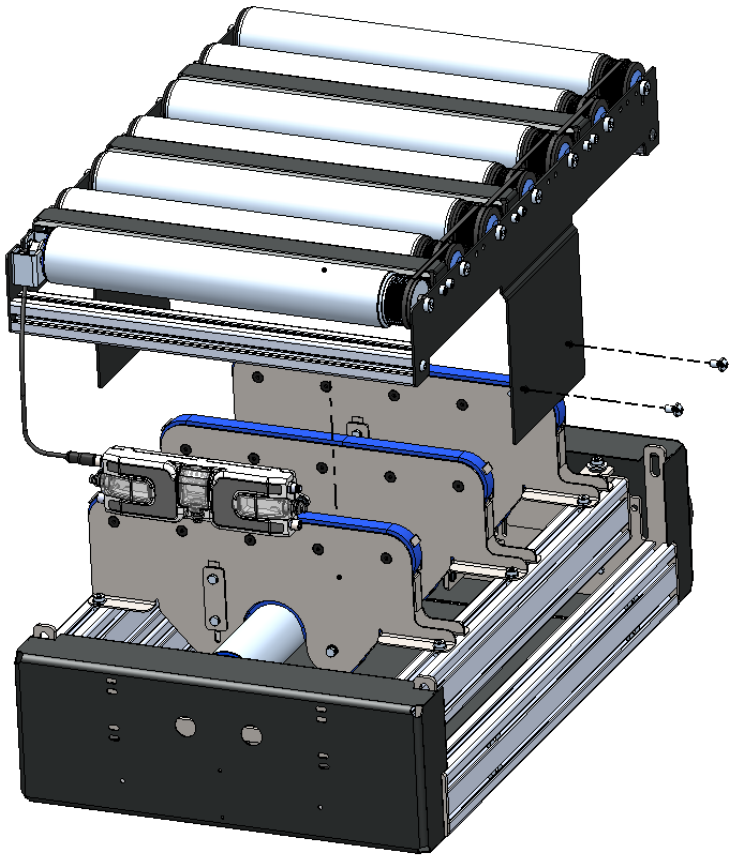

4.4 WIRING AND GROUNDING OF THE DEVICE

The control card can be found at the short side of the device module. Make sure that the cable is connected properly. Failure to do so may lead to malfunction.

The motor driven roller is already pre-cabled during production. Wiring the control card, like power supply and PLC-communication, must be done according to the Integration Manual. Flowsort will provide the integration manual on order or on request.

When using the products, a higher electrical voltage build-up is generally not to be expected. However, the dust and the friction on the belt can cause a voltage build-up. Therefore, Flowsort states that each product is connected to a main ground of the electrical connection according to DIN VDE 0100 (VDE 0100).

This is a protection against possible electrical sparking, dust accumulation and it also protects the motor electronics from overvoltage.

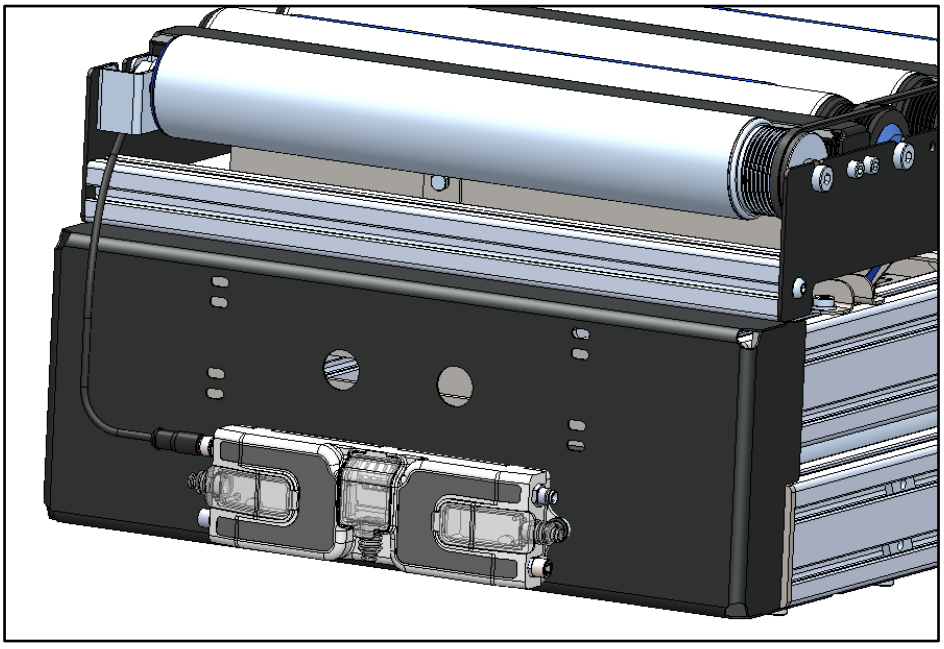

OPERATION

5.1 FIRST CHECKS BEFORE OPERATING



- When connecting the device to another system, you will have to perform a risk analysis of the entire installation.
- Always check the installed modules for damages before starting operation. If there are visible damages, please inform operating supervisor immediately. Do not start operation, see maintenance.
- Check the area for material that should not be there, and remove this when it's there (packaging material, tools, debris, etc.).
- Check if all signs/restrictions are in place (max. load capacity and restriction for use).
- Check if all personnel is properly instructed before working with or near the device.

5.2 DURING OPERATION



Shut down the whole system if any of the following occurs:

- A broken or damaged component.
- Damage to structural components such as frame, side guiding and leg set.
- Doubtful noise from any of the components.
- Liquids are on the systems.
- Unit loads on the conveyor system are getting stuck.

5.3 IN CASE OF AN ACCIDENT



- Press in the emergency stop of the system where the device is located.
- Secure the area and set up appropriate signage.
- In the event of an accident: provide first aid and let someone else call the emergency services.
- Inform qualified personnel and/or operating supervisor.
- Have the system repaired by qualified maintenance personnel.
- Do not use the device until it has been approved by qualified maintenance personnel.

5.4 SET-UP MOVEMENT

The travel direction of the product is either forward or backward. Setting up the timing and speed of the Motor driven unit will be done in the software. Please contact Flowsort B.V. for the right function blocks. The function blocks are available in multiple brands of PLC-suppliers (i.e. Siemens, Omron, Allen Bradley and others).

MAINTENANCE

6.1 MAINTENANCE INTERVALS

Damage can occur if maintenance is not performed as planned. If the maintenance intervals are not followed as suggested, the warranty expires. Flowsort B.V. has defined the following maintenance intervals:

ACTIVITY	INTERVAL
Check for possible damage to the conveyor components	daily
Noise testing on moving parts	daily
Clean the machine from contamination	daily
Check screw connections	monthly
Check the condition and function of the side guide	monthly
Check that the protective device is completely and properly installed	monthly
Check the drive for oil loss or excessive noise	monthly
Check the condition and running of the belts: - Is the tension of the belts sufficient? - Are there any tears or cuts in the belts?	quarterly

During these maintenance periods the device should be disconnected from the power supply. Please clean and look closely for wear during inspection. If errors are found during inspections, they must be corrected immediately.

6.2 GENERAL MAINTENANCE INFORMATION



Clean the outside of the device with a dry cloth. Do not use aggressive cleaning agents as it could affect the components resulting in a possible oxidization of the parts. Never use water for cleaning!
Secure the working area and shut down the system and apply appropriate signage.
Make sure nobody can start up the system during maintenance.
Make sure maintenance is carried out by qualified personnel who are familiar with the instruction manual and procedures.
Wear personal protective equipment.
If in doubt, contact the supplier or manufacturer of the parts.

6.3 CLEANING THE BELTS AND ROLLERS

Due to dust and small splinters of damaged products (i.e. cardboard dust, loosened tapes, etc.) the belts can get dirty. With real dirt on the rollers, the sortation movement can be affected. Therefore, the belts and rollers need to be cleaned.
To clean the belts, use a degreaser or another kind of liquid which doesn't affect the material of the belt.

6.4 SPARE PARTS

All electronic and drive parts are from preferred suppliers. Please have a look on their website for additional maintenance and cleaning information.
Please have a look at our recommended spare part list in this document.

Main spare parts for the device:

Nr.	Description	Part number	Info	Qty/Machine
1	Motor Driven Roller	E000051.400	400mm	1
		E000051.500	500mm	
		E000051.600	600mm	
		E000051.700	700mm	
		E000051.800	800mm	
2	Driven Roller	V000103.400	400mm	6 or 8
		V000103.500	500mm	
		V000103.600	600mm	
		V000103.700	700mm	
		V000103.800	800mm	
3	Control card	E000003	ConveyLinx-Ai2	1
		E000049	ConveyLinx-Ai3 FC	
		E000031	ConveyLinx-Ai3 RC	
		E000004	MotionLinx-Ai	
		E000056	ConveyLinx-Ai2	
		E000047	ConveyLinx-Ai3 FC	
4	Poly-V Belt	V000104	Conveyxonic PJ 302 2RIB	6 or 8

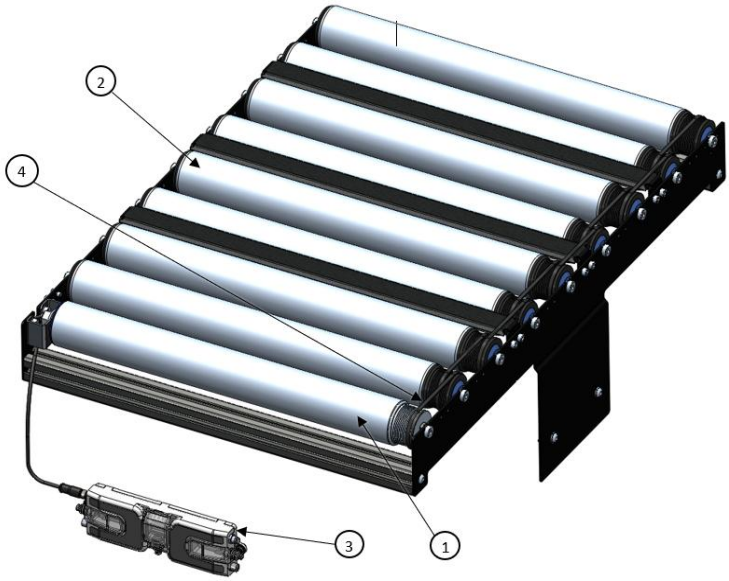

6.5 DEVICE INSPECTION

Item	Inspection	Outcome	Action to execute
Motor Driven Roller	visual check sound check mounting check	damaged cable abnormal/scratchy noise bolts are too loose	Replace the motor. Replace the motor. Tighten bolts with torque wrench.
Driven Roller	visual check sound check mounting check	damaged / dented surface dirtiness abnormal/scratchy noise bolts are too loose	Replace the roller. Clean the surface of the roller. Replace the roller. Tighten bolts with torque wrench.
Control card	visual check	no power loose cables dirtiness damaged	Check power supply. Fasten loose cables and check wiring. Clean control card. Replace control card.
Poly-V belt	visual check	damaged/broken belt	replace Poly-V belt

6.6 REMOVAL AND REPLACEMENT OF PARTS

In case of malfunction. the parts in the product need to be repaired and replaced as soon as possible.



Make sure the device is disconnected from the power supply during cleaning, maintenance and/or replacements.

6.6.1 DRIVEN ROLLER REMOVAL/REPLACEMENT

Step 1

Remove the screws from both ends of the roller.

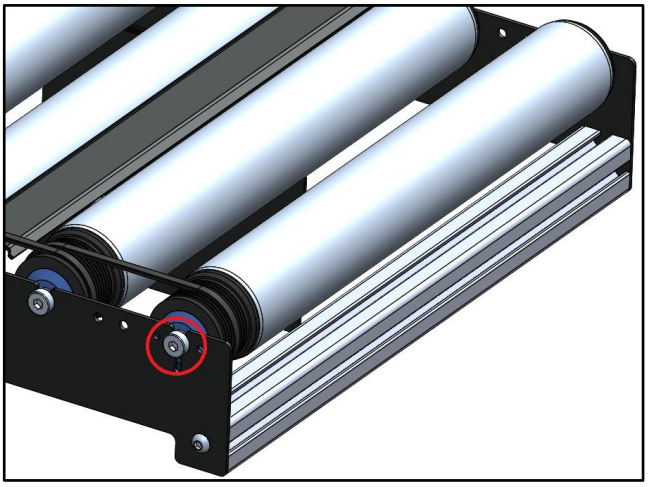

Step 2

Lift out the roller from the frame, remove the belt from the groove, and the roller is free.

6.6.2 POLY-V BELT REMOVAL/REPLACEMENT

Repeat the steps of chapter **6.6.1** with two neighbouring rollers, and the Poly-V belt between the two rollers becomes free.

To replace the belt, do the steps backwards.

6.6.3 MOTOR DRIVEN ROLLER REMOVAL/REPLACEMENT

Step 1
Remove/loosen the size 17 nut from the shafts of the MDR.

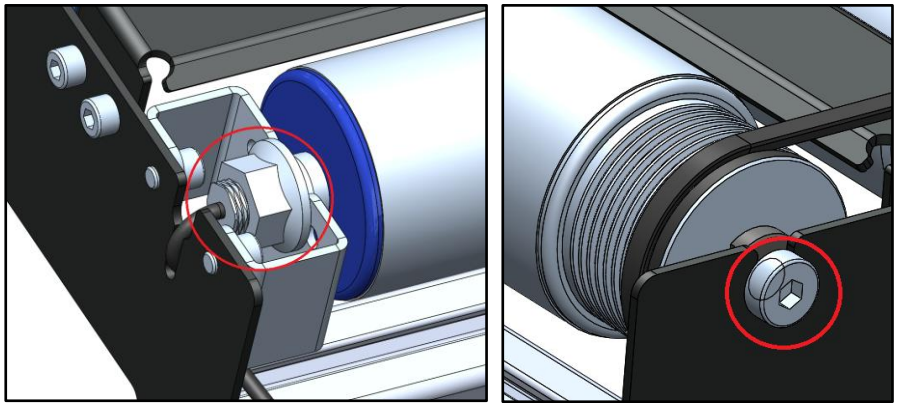

Step 2
Remove/loosen the M8 screw on the other side of the MDR.

Step 3
Lift the MDR out of its slot, remove the belt from the groove, and the MDR becomes free.

Step 3
Replacing the MDR can be done by repeating the steps in reverse order.
The tightening torque of the nut: 39-41 Nm

6.6.4 CONTROL CARD REMOVAL/REPLACEMENT

Step 1
Disconnect all cables to the control card. Please keep in mind how the cables are connected to the control card.

Step 2
Untighten both M5 screws holding the control card.

Step 3
Replacing the control card can be done by repeating the steps in reverse order.

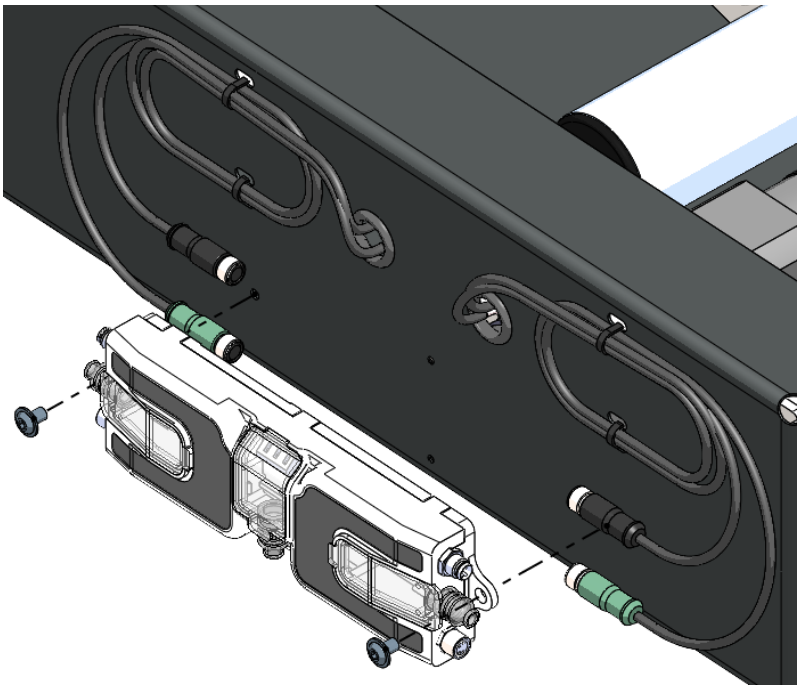

Controller port designation:

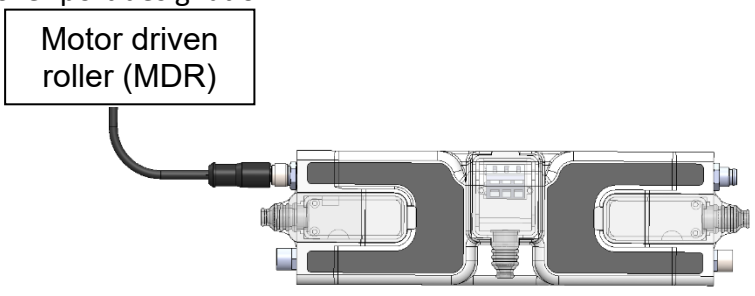

TROUBLESHOOTING

Issue	Cause	Avoidance
control card does not work	no power	Check power supply
	zone controller is broken due damaging or used internal fuse	Replace control card.
control card shows failure	motor is broken due to overheating	Check MDR and if necessary, replace the motors.
	motor is damaged	Replace MDR motor.
	motor cable is damaged	Replace MDR motor.
	control card failure	Check issue “Control card does not work”.
Rollers are not moving	control card failure	Check issue “Control card does not work”.
	Poly-V belt is broken	Replace the Poly-V belt(s).
	motor is damaged	Replace MDR.
	motor cable is damaged	Replace MDR.
	broken bearing	Replace Roller
product flow goes wrong	unit load is leaving the way intended	Check software.

7.1 TROUBLESHOOTING

In case of any issues with the product, see the below column to check the possible solution. Also please contact Flowsort in any issue related topic.

DECLARATION OF CONFORMITY

7.2 CE & UKCA CERTIFICATION

Concerning the Machinery Directive 2006/42/EC (appendix II 1 A)

We Flowsort Kft.
Gyár u. 2
2040 Budaörs
Hungary

declare entirely under our own responsibility:

We are the manufacturer of the product:
Mark: **Flowsort**
Type: **Motor Driven Unit (MDU) 24V/48V**
Function: conveying unit loads
Year of construction: *
Serial no: *
to which this declaration refers.

The machine has additionally been designed and built conforming with the requirements of the supply of Machinery (Safety) Regulation 2008 (UKCA)

The machine meets the requirements of the additional Directives shown below:
Electromagnetic Compatibility Directive 2014/30/EU
Electromagnetic Compatibility Regulations 2016 (UKCA)

The machine has been designed and built in conforming to the European Standards:

EN-ISO 12100-1:2010	Safety of machinery - General principles for design - Risk assessment and risk reduction
EN-IEC 60204-1:2018	Safety of machinery - Electrical equipment of machines - Part 1: General requirements
EN 619:2022	Continuous handling equipment and systems – Safety requirements for equipment for mechanical handling of unit loads
EN-ISO 14120:2015	Safety of machinery - Guards – General requirements for the design and construction of fixed and movable guards

Note: This Declaration does not include all issues concerning the control system, such as the wiring, programming and supply of control components for this is delivered by another party.

Signed at: Budaörs
Date: 15.10.2026
Signed by: Ralf Steinmann
Function: Managing Director

Flowsort Kft.
Gyár u. 2
2040 Budaörs
Hungary